ZONE	LTR.	DESCRIPTION	DATE	APPROVED

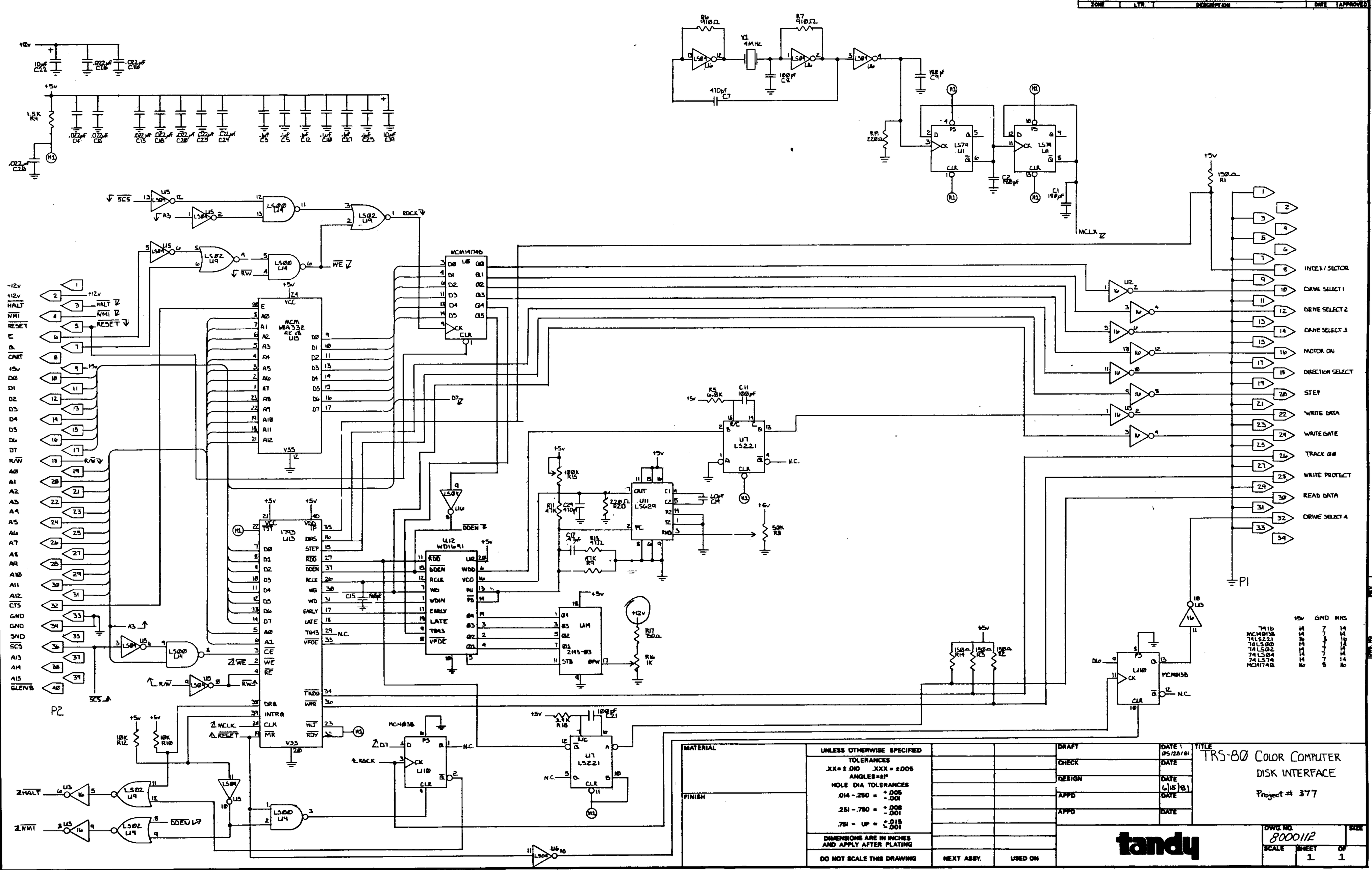

	+5V	GND	PINS
7416	14	7	14
MC14013B	14	7	14
74LS221	16	8	16
74LS00	14	7	14
74LS02	14	7	14
74LS04	14	7	14
74LS74	14	7	14
MC14174B	16	8	16